DRAWING NO.	SHEET NO: 1	REV	BOOK NO:											SIMILAR TO:	DRAWING TYPE:
B- 320628-99														REPLACES:	DRAWN AS: 320628-99

E EXTRUSION DIMENSION | R MANDATORY CHAMFER | M MODIFY | CS CUSTOMER SPECIFICATION

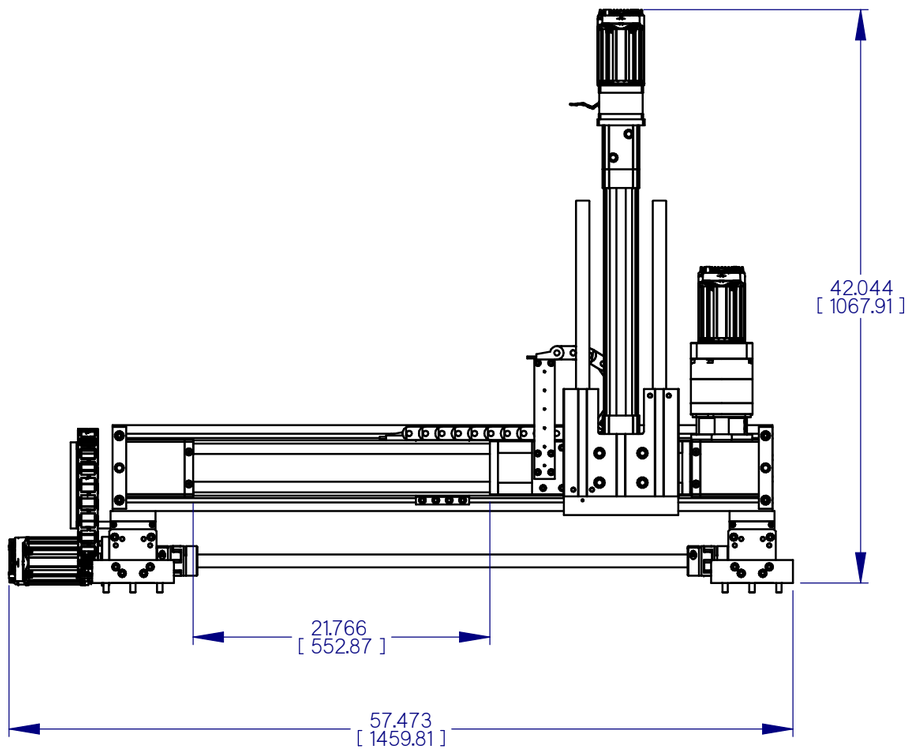

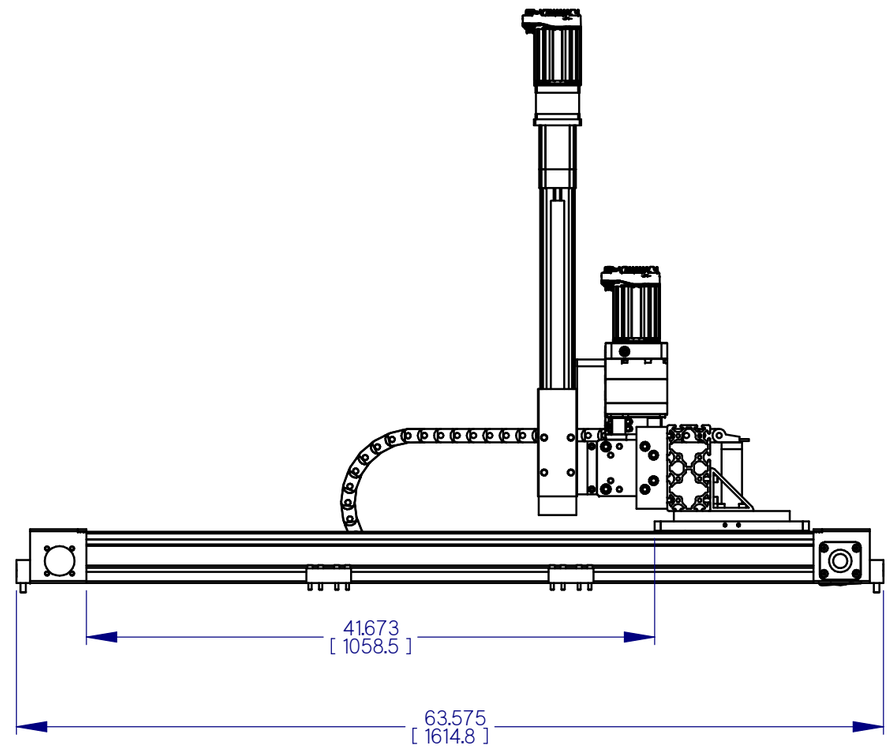

CONCEPTUAL ONLY

SIGN OFF WILL BE REQUIRED AFTER TIME OF ORDER
A NEW PRINT WITH ML NUMBER
WILL BE SUBMITTED FOR APPROVAL AFTER ORDER IS PLACED

NOTES:

1) ALL DIMENSIONS FOR REFERENCE ONLY
2) ALL DIMENSIONS SUBJECT TO CHANGE PENDING FINAL DESIGN
3) SLIDES ASSEMBLED COMPLETELY BUT SYSTEM SHIPPED AS A KIT
4) MOTOR, GEARHEAD AND CABLE CARRIER DIMENSIONS MAY VARY DUE TO VENDOR SUPPLIED MODELS

REV	CHG	DESCRIPTION	BY	DATE	CHKD	DOC NO
		PRE-PRODUCTION RELEASE	ETB	12-11-24		

phd THIS DOCUMENT IS THE PROPERTY OF PHD, INC. AND CONTAINS PROPRIETARY AND CONFIDENTIAL INFORMATION. THIS DOCUMENT REGARDLESS OF FORMAT OR MEDIUM IS LOANED WITH THE EXPRESS UNDERSTANDING THAT NEITHER IT NOR THE INFORMATION CONTAINED THEREIN SHALL BE DISCLOSED WITHOUT THE WRITTEN CONSENT OF PHD, INC. AND THAT THE INFORMATION SHALL BE USED BY THE RECIPIENT ONLY AS APPROVED EXPRESSLY BY PHD, INC. THIS DOCUMENT SHALL BE RETURNED TO PHD, INC. UPON REQUEST. © COPYRIGHT BY PHD, INC. ALL RIGHTS RESERVED.

ALL DIMENSIONS ARE REFERENCE ONLY UNLESS OTHERWISE NOTED

ASME Y14.5M - 1994
THIRD ANGLE PROJ

REMOVE BURRS AND BREAK ALL EDGES .015 MAX | SCALE: 9:100

TITLE: CATALOG DIMENSIONS

FIRST USED ON: MODULAR 3-AXIS ASSEMBLY

	BY:	DATE:
DSG	ETB	12-11-24
DWG	ETB	12-11-24
CHK		

MATERIAL: -----
HEAT TREAT: -----
FINISH/PLATING: -----
TYPE OF CHANGE: | BY:
DRAWING NO. B- 320628-99 | SHEET NO: 1

DRAWING NO.	SHEET NO: 2	REV	BOOK NO:											SIMILAR TO:	DRAWING TYPE:
B- 320628-99														REPLACES:	DRAWN AS: 320628-99

E EXTRUSION DIMENSION | R MANDATORY CHAMFER | M MODIFY | CS CUSTOMER SPECIFICATION

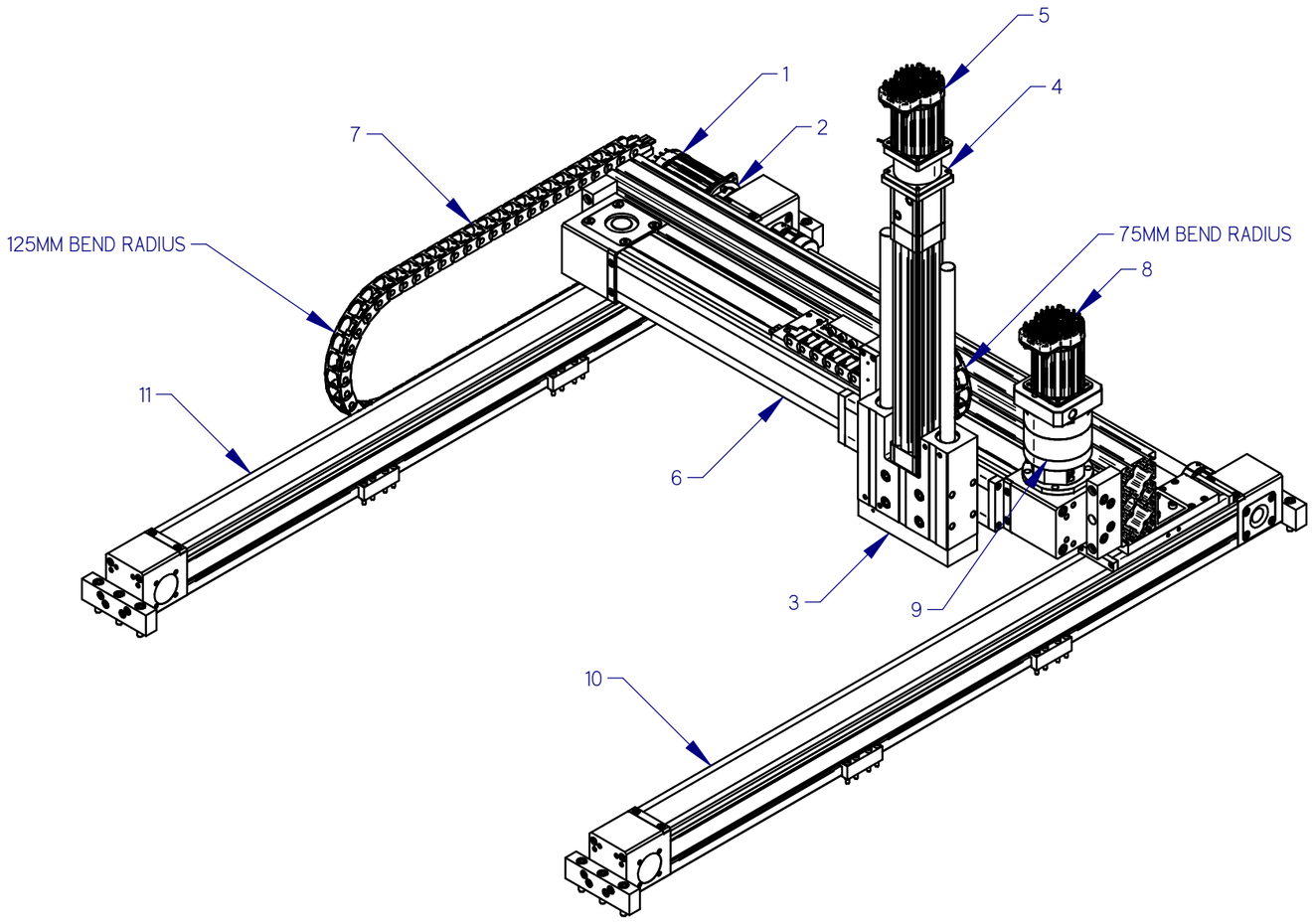

PART LIST	
PART NUMBER	PART
1	MOTOR X-AXIS
2	HALLOWBORE 5:1 GEARBOX (X)
3	ESLB56X300-RB010-QL11-W0687
4	MOTOR BRAKE
5	MOTOR Z-AXIS
6	ESUS58X550-RT256-QLT1-KS111
7	CABLE MANAGEMENT
8	MOTOR Y-AXIS
9	HALLOWBORE 10:1 GEARBOX (Y)
10	ESUS56X1050-RT192-QLT1-KS121
11	ESUS56X1050-RT192-QLTD-KS121

PRELIMINARY COPY

REV	CHG	DESCRIPTION	BY	DATE	CHKD	DOC NO
		PRE-PRODUCTION RELEASE	ETB	12-11-24		

THIS DOCUMENT IS THE PROPERTY OF PHD, INC. AND CONTAINS PROPRIETARY AND CONFIDENTIAL INFORMATION. THIS DOCUMENT REGARDLESS OF FORMAT OR MEDIUM IS LOANED WITH THE EXPRESS UNDERSTANDING THAT NEITHER IT NOR THE INFORMATION CONTAINED THEREIN SHALL BE DISCLOSED WITHOUT THE WRITTEN CONSENT OF PHD, INC. AND THAT THE INFORMATION SHALL BE USED BY THE RECIPIENT ONLY AS APPROVED EXPRESSLY BY PHD, INC. THIS DOCUMENT SHALL BE RETURNED TO PHD, INC. UPON REQUEST. © COPYRIGHT BY PHD, INC. ALL RIGHTS RESERVED.

ALL DIMENSIONS ARE REFERENCE ONLY UNLESS OTHERWISE NOTED

ASME Y14.5M - 1994
THIRD ANGLE PROJ

REMOVE BURRS AND BREAK ALL EDGES .015 MAX | SCALE: 9:100

TITLE: CATALOG DIMENSIONS

FIRST USED ON: MODULAR 3-AXIS ASSEMBLY

	BY:	DATE:
DSG	ETB	12-11-24
DWG	ETB	12-11-24
CHK		

MATERIAL: -----

HEAT TREAT: -----

FINISH/PLATING: -----

TYPE OF CHANGE: | BY:

DRAWING NO. B- 320628-99 | SHEET NO: 2